TRES COMERCIAL, S.L.
C/ Penedés, 16-26 | Zona industrial, Sector A | 08759 Vallirana (Barcelona)
93 683 40 04 | comercial@tresgriferia.com
www.tresgriferia.com

Certificate No.:	***CC030335NM2017***
Initial Certification:	***08/11/2017***
Issue Date:	***01/01/2024***
Expiry Date:	***01/01/2029***

CERTIFICATE OF CONFORMITY

TRES COMERCIAL S.L., with registered office at C/ Penedès 16-26, ZonaIndustrial - Sector A, 08759 Vallirana (Barcelona), hereby declares under its sole responsibility that the sanitary tapware:

Brand: TRES
Model(s): 030335NM
Collection: KITCHEN
Family: Single-handle

As the subject of this declaration, is produced under a quality management system in accordance with the UNE-EN ISO 9001:2015 standard(ER-1111/1999) for the production and assembly of sanitary tapware and accessories, and complies with the requirements of both national and European standards:

Royal Decree 145/2023 of 28 February (industrial safety) Annex 1: 6.Sanitary tapware.

Positive Lists 4MS (Common Approach), of materials in contact with drinking water.

EN-817: Sanitary Tapware. Mechanical mixers (PN 10). General technical specifications.

EN 248: Corrosion resistance and adhesion of surface coating.

Characteristics and performance in the attached technical sheet.

Quality Department

TRES COMERCIAL SL



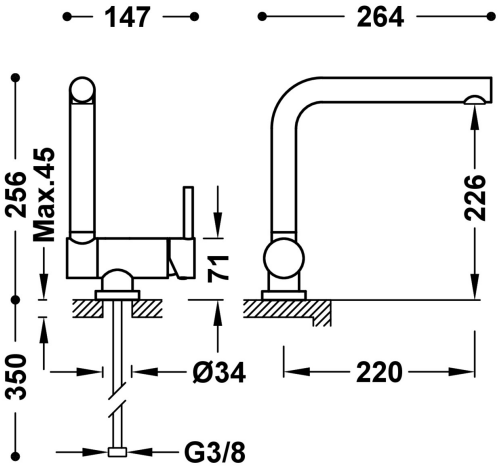

030335NM

KITCHEN

Single-handle kitchen mixer tap with folding spout

· With G3/8 flexible connection hoses.

· Total height with spout down: 7,1 cm.

Matt Black Finish

Spout swivel angle: 360

Cartridge reference: 913438510

Flow rate (l/min): 15

Cold-tres®. Energy savings. The taps turn on with cold water, preventing unnecessary activation of the water heater.

Tres-duo®. Water savings. Two on positions for the lever. Half the consumption in the middle position.