TRES COMERCIAL, S.L.
C/ Penedés, 16-26 | Zona industrial, Sector A | 08759 Vallirana (Barcelona)
93 683 40 04 | comercial@tresgriferia.com
www.tresgriferia.com

Certificate No.:	***CC19016905AC2022***
Initial Certification:	***30/09/2022***
Issue Date:	***01/01/2024***
Expiry Date:	***01/01/2029***

CERTIFICATE OF CONFORMITY

TRES COMERCIAL S.L., with registered office at C/ Penedès 16-26, ZonaIndustrial - Sector A, 08759 Vallirana (Barcelona), hereby declares under its sole responsibility that the sanitary tapware:

Brand: TRES
Model(s): 19016905AC
Collection: OVER-WALL
Family: Thermostatic

As the subject of this declaration, is produced under a quality management system in accordance with the UNE-EN ISO 9001:2015 standard(ER-1111/1999) for the production and assembly of sanitary tapware and accessories, and complies with the requirements of both national and European standards:

Royal Decree 145/2023 of 28 February (industrial safety) Annex 1: 6.Sanitary tapware.

Positive Lists 4MS (Common Approach), of materials in contact with drinking water.

EN-1111: Sanitary Tapware. Thermostatic mixers (PN 10). General technical specifications.

EN 248: Corrosion resistance and adhesion of surface coating.

Characteristics and performance in the attached technical sheet.

Quality Department

TRES COMERCIAL SL

19016905AC

OVER-WALL

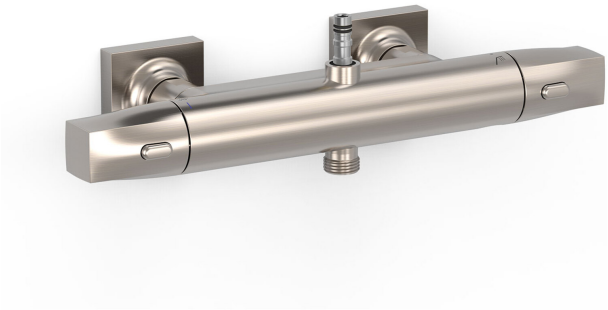

2-way Over-wall thermostatic wall tap with shower bar connection

· To complete with the rest of the shower parts.

· Inverter integrated into the flow regulator.

· Square-round handle.

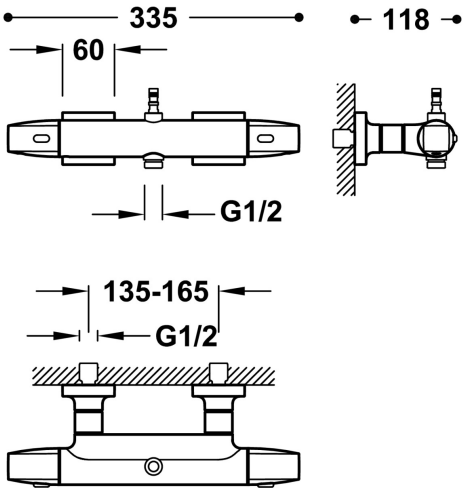

Steel Finish

Flow rate (l/min): 16

Environmental Quality Guarantee (Catalonia)

Distributor cartridge: 29928302

Easy-Clean®. The thermostatic cartridge is easy to clean without losing temperature calibration

Connecting element: MURAL G1/2"

Eccentricity (cm): 13-16

Acoustic group: I -

Tres Instant: The thermostatic cartridge ensures a constant flow of water at the desired temperature, in spite of pressure or temperature changes.

Material: Low lead content brass

N New

Corrosion resistance

Tres Touch-cool®. The tap surface remains at a temperature suitable for touching, thus preventing burns.