TRES COMERCIAL, S.L.
C/ Penedés, 16-26 | Zona industrial, Sector A | 08759 Vallirana (Barcelona)
93 683 40 04 | comercial@tresgriferia.com
www.tresgriferia.com

Certificate No.:	***CC21140501BM2019***
Initial Certification:	***02/09/2019***
Issue Date:	***01/01/2024***
Expiry Date:	***01/01/2029***

CERTIFICATE OF CONFORMITY

TRES COMERCIAL S.L., with registered office at C/ Penedès 16-26, ZonaIndustrial - Sector A, 08759 Vallirana (Barcelona), hereby declares under its sole responsibility that the sanitary tapware:

Brand: TRES
Model(s): 21140501BM
Collection: OUT-OF-STOCK
Family: Single-handle

As the subject of this declaration, is produced under a quality management system in accordance with the UNE-EN ISO 9001:2015 standard(ER-1111/1999) for the production and assembly of sanitary tapware and accessories, and complies with the requirements of both national and European standards:

Royal Decree 145/2023 of 28 February (industrial safety) Annex 1: 6.Sanitary tapware.

Positive Lists 4MS (Common Approach), of materials in contact with drinking water.

EN-817: Sanitary Tapware. Mechanical mixers (PN 10). General technical specifications.

EN 248: Corrosion resistance and adhesion of surface coating.

Characteristics and performance in the attached technical sheet.

Quality Department

TRES COMERCIAL SL



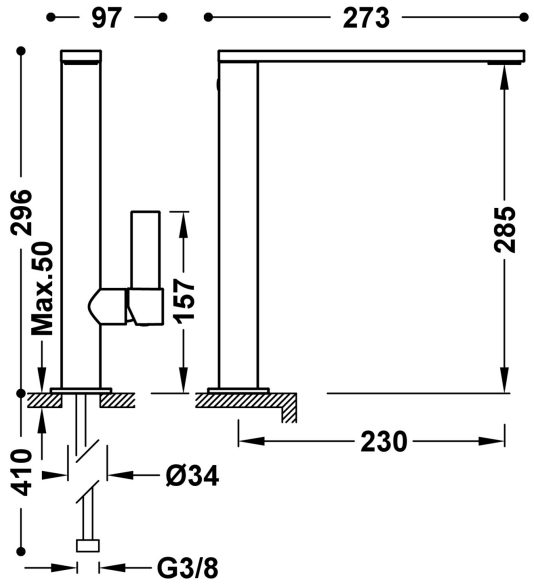

21140501BM

OUT-OF-STOCK

XXL single-handle washbasin mixer tap with lateral lever

· G3/8 flexible hoses.

Matt White Finish

Aerator: HIDDEN M24x1

Spout swivel angle: 360

Cartridge reference: 9130190

Cold-tres®. Energy savings. The taps turn on with cold water, preventing unnecessary activation of the water heater.

Long-lasting cartridge.

Connecting element: FLEXIBLE G3/8"

Acoustic group: II -

Material: Low lead content brass

Corrosion resistance