TRES COMERCIAL, S.L.
C/ Penedés, 16-26 | Zona industrial, Sector A | 08759 Vallirana (Barcelona)
93 683 40 04 | comercial@tresgriferia.com
www.tresgriferia.com

Certificate No.:	***CC23045301OM2024***
Initial Certification:	***01/07/2024***
Issue Date:	***01/07/2024***
Expiry Date:	***01/07/2029***

CERTIFICATE OF CONFORMITY

TRES COMERCIAL S.L., with registered office at C/ Penedès 16-26, ZonaIndustrial - Sector A, 08759 Vallirana (Barcelona), hereby declares under its sole responsibility that the sanitary tapware:

Brand: TRES
Model(s): 23045301OM
Collection: KITCHEN
Family: Electronic

As the subject of this declaration, is produced under a quality management system in accordance with the UNE-EN ISO 9001:2015 standard(ER-1111/1999) for the production and assembly of sanitary tapware and accessories, and complies with the requirements of both national and European standards:

Royal Decree 145/2023 of 28 February (industrial safety) Annex 1: 6.Sanitary tapware.

Positive Lists 4MS (Common Approach), of materials in contact with drinking water.

EN-817: Sanitary Tapware. Mechanical mixers (PN 10). General technical specifications.

EN 248: Corrosion resistance and adhesion of surface coating.

Characteristics and performance in the attached technical sheet.

Quality Department

TRES COMERCIAL SL

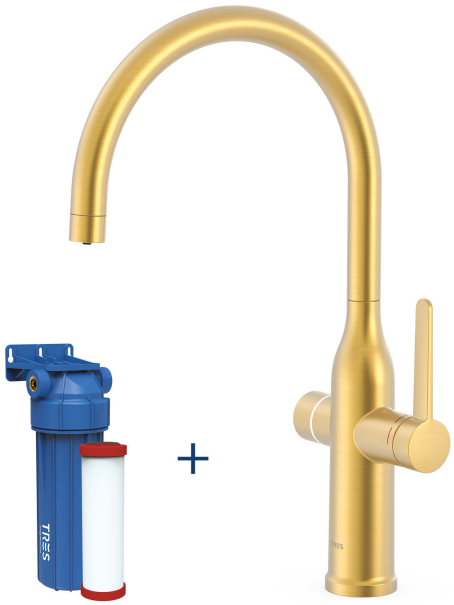

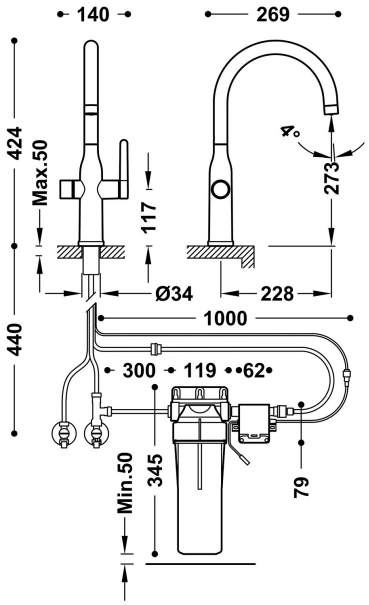

23045301OM

KITCHEN

Dual-source single-lever kitchen mixer for mains and filtered water

· With touch system for filtered water.

· Includes a filter for six months (10,000 litres) of filtered water.

· The filter removes b acteria, viruses and heavy metals.

· Flexible G3/8 connection hoses.

24K Matt Gold Finish

Aerator: HIDDEN MADE SILLICONE M18.5x1

Spout swivel angle: 360

Cartridge reference: 29902503

Flow rate (l/min): 7,6

Cold-tres®. Energy savings. The taps turn on with cold water, preventing unnecessary activation of the water heater.

Long-lasting cartridge.

Connecting element: FLEXIBLE G3/8"

Acoustic group: I -

Material: Low lead content brass

N New

Corrosion resistance