TRES COMERCIAL, S.L.
C/ Penedés, 16-26 | Zona industrial, Sector A | 08759 Vallirana (Barcelona)
93 683 40 04 | comercial@tresgriferia.com
www.tresgriferia.com

Certificate No.:	***CC24112352LM2025***
Initial Certification:	***11/11/2025***
Issue Date:	***11/11/2025***
Expiry Date:	***11/11/2030***

CERTIFICATE OF CONFORMITY

TRES COMERCIAL S.L., with registered office at C/ Penedès 16-26, ZonaIndustrial - Sector A, 08759 Vallirana (Barcelona), hereby declares under its sole responsibility that the sanitary tapware:

Brand: TRES
Model(s): 24112352LM
Collection: GRIFOS PARA WC
Family:

As the subject of this declaration, is produced under a quality management system in accordance with the UNE-EN ISO 9001:2015 standard(ER-1111/1999) for the production and assembly of sanitary tapware and accessories, and complies with the requirements of both national and European standards:

Royal Decree 145/2023 of 28 February (industrial safety) Annex 1: 6.Sanitary tapware.

Positive Lists 4MS (Common Approach), of materials in contact with drinking water.

EN-200: Sanitary Tapware. Single and mixer taps for water supply systems type 1 and type 2. General technical specifications.

EN 248: Corrosion resistance and adhesion of surface coating.

Characteristics and performance in the attached technical sheet.

Quality Department

TRES COMERCIAL SL



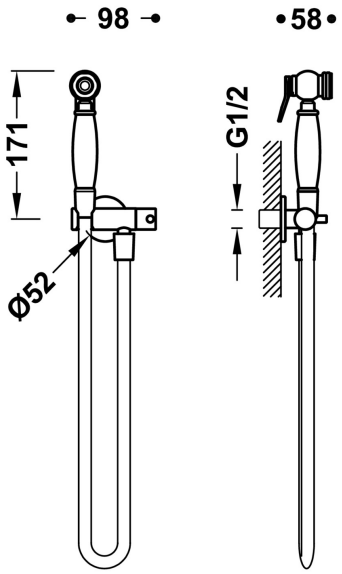

24112352LM

GRIFOS PARA WC

Wall-mounted single-water tap with bidet hand shower for toilet

- Matt Aged Brass Finish
- Brass hand shower
- Connecting element: G1/2"
- Acoustic group: I -
- Material: Low lead content brass
- Corrosion resistance