TRES COMERCIAL, S.L.
C/ Penedés, 16-26 | Zona industrial, Sector A | 08759 Vallirana (Barcelona)
93 683 40 04 | comercial@tresgriferia.com
www.tresgriferia.com

Certificate No.:	***CC24216409LM2019***
Initial Certification:	***09/05/2019***
Issue Date:	***01/01/2024***
Expiry Date:	***01/01/2029***

CERTIFICATE OF CONFORMITY

TRES COMERCIAL S.L., with registered office at C/ Penedès 16-26, ZonaIndustrial - Sector A, 08759 Vallirana (Barcelona), hereby declares under its sole responsibility that the sanitary tapware:

Brand: TRES
Model(s): 24216409LM
Collection: TRES-CLASIC
Family: Thermostatic

As the subject of this declaration, is produced under a quality management system in accordance with the UNE-EN ISO 9001:2015 standard(ER-1111/1999) for the production and assembly of sanitary tapware and accessories, and complies with the requirements of both national and European standards:

Royal Decree 145/2023 of 28 February (industrial safety) Annex 1: 6.Sanitary tapware.

Positive Lists 4MS (Common Approach), of materials in contact with drinking water.

EN-1111: Sanitary Tapware. Thermostatic mixers (PN 10). General technical specifications.

EN 248: Corrosion resistance and adhesion of surface coating.

Characteristics and performance in the attached technical sheet.

Quality Department

TRES COMERCIAL SL



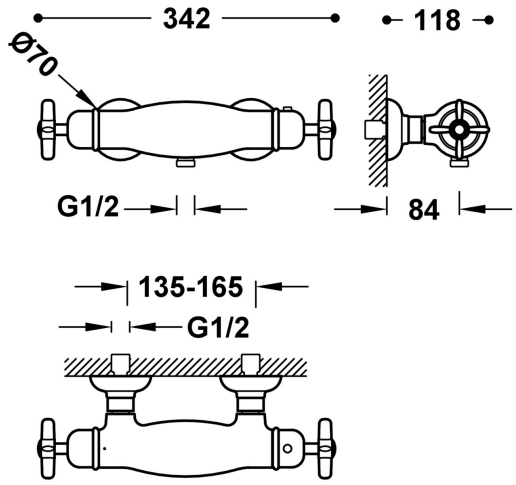

24216409LM

TRES-CLASIC

Wall-mounted thermostatic shower mixer

· Anti-limescale brass hand shower: Ø 78 mm.

· Adjustable support for hand shower.

· Reinforced metal hose.

Matt Aged Brass Finish

BELGAQUA certification (Belgium)

Environmental Quality Guarantee (Catalonia)

Brass hand shower

Tres Instant: The thermostatic cartridge ensures a constant flow of water at the desired temperature, in spite of pressure or temperature changes.