# 19016903OPM

**OVER-WALL**

## 2-way Over-wall thermostatic wall tap with shower bar connection

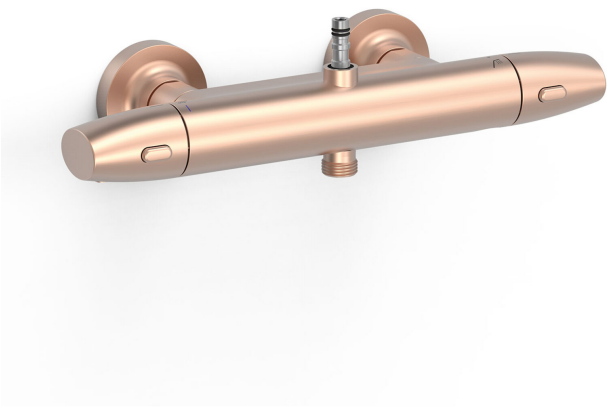

- To complete with the rest of the shower parts.
- Inverter integrated into the flow regulator.
- Oval handle.

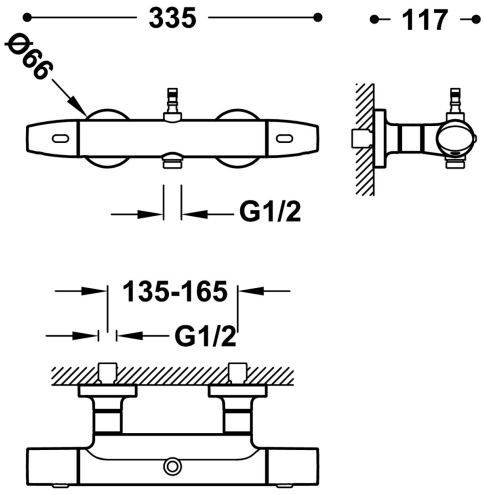


24K matte rose gold Finish

Flow rate (l/min): 16

BELGAQUA certification (Belgium)

Environmental Quality Guarantee (Catalonia)

Distributor cartridge: 29928302

Easy-Clean®. The thermostatic cartridge is easy to clean without losing temperature calibration

Connecting element: MURAL G1/2"

Eccentricity (cm): 13-16

Acoustic group: I -

Tres Instant: The thermostatic cartridge ensures a constant flow of water at the desired temperature, in spite of pressure or temperature changes.

Material: Low lead content brass

New

Corrosion resistance

# 19016903OPM

**OVER-WALL**

## 2-way Over-wall thermostatic wall tap with shower bar connection

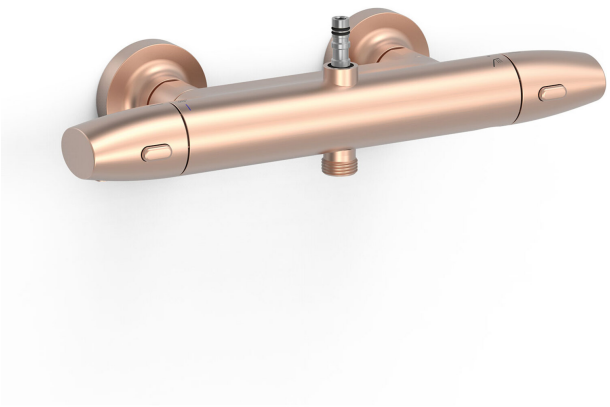

Tres Touch-cool®. The tap surface remains at a temperature suitable for touching, thus preventing burns.

