20230034AC

SLIM

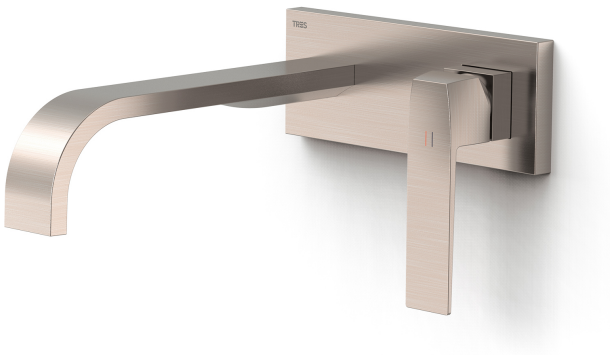

Visible part for recessed sink body

- Visible part only.
- Includes concealing plate, handle and 240 mm spout.
- Recessed body not included.

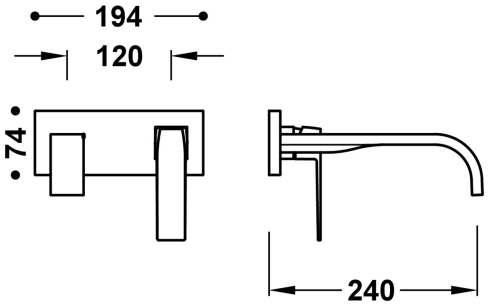

Steel Finish

Aerator: HIDDEN M185x1

Cartridge reference: 29902801

Flow rate (l/min): 5

Environmental Quality Guarantee (Catalonia)

Material: Low lead content brass

N New

Corrosion resistance