

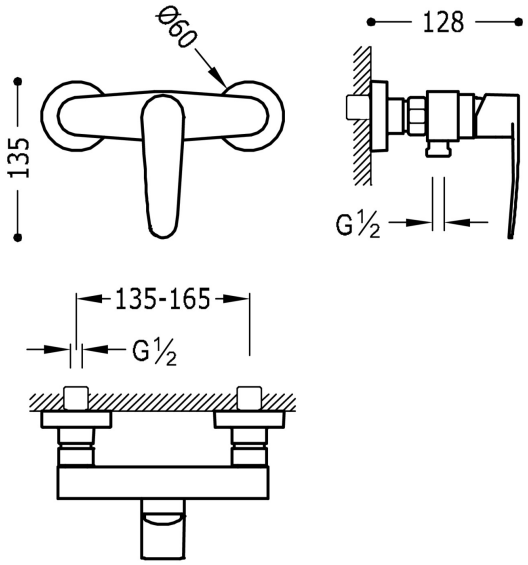

20416701

OUT-OF-STOCK

Wall-mounted single-handle shower mixer tap

· Anti-limescale hand shower.

· Adjustable support for hand shower.

· Satin hose.

Chrome Finish

Cartridge reference: 910719005

Flow rate (l/min): 10

BELGAQUA certification (Belgium)

ABS hand shower

Long-lasting cartridge.

Connecting element: MURAL G1/2"

Acoustic group: II -

Material: Low lead content brass

Hand shower measurements: 100

Corrosion resistance