

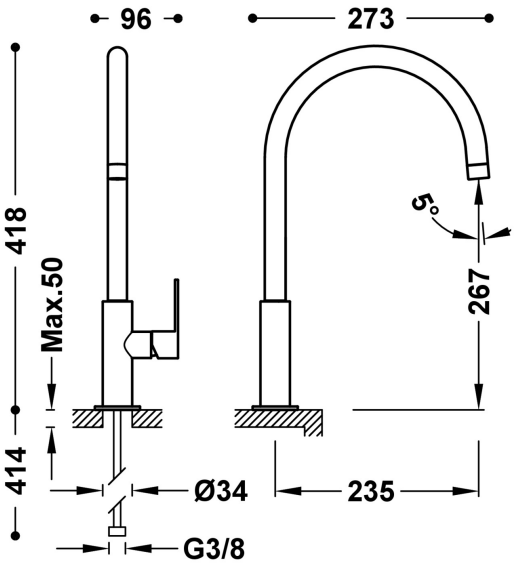

20544001BM

OUT-OF-STOCK

Single-handle kitchen mixer tap

· With G3/8 flexible hose.

Matt White Finish

Spout swivel angle: 360

Cartridge reference: 9130190

Flow rate (l/min): 10

Cold-tres®. Energy savings. The taps turn on with cold water, preventing unnecessary activation of the water heater.