

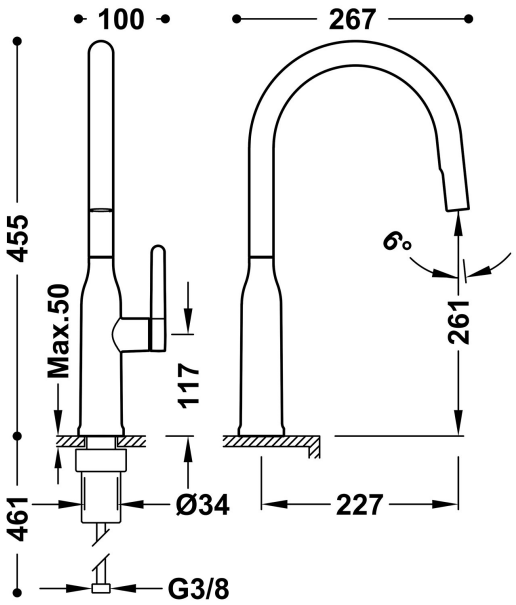


# 23043802AC

**KITCHEN**

## Single lever kitchen mixer with dual function pull-out spout

· With retractable braided polyamide hose.

· With G3/8 flexible hose.

Steel Finish

Spout swivel angle: 360

Cartridge reference: 29902506

Flow rate (l/min): 6,6

Cold-tres®. Energy savings. The taps turn on with cold water, preventing unnecessary activation of the water heater.

Long-lasting cartridge.

Connecting element: FLEXIBLE G3/8"

Acoustic group: I -

Material: Low lead content brass

N New

Corrosion resistance