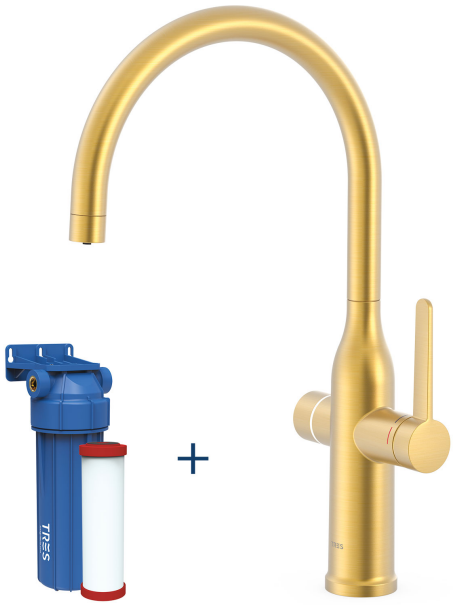

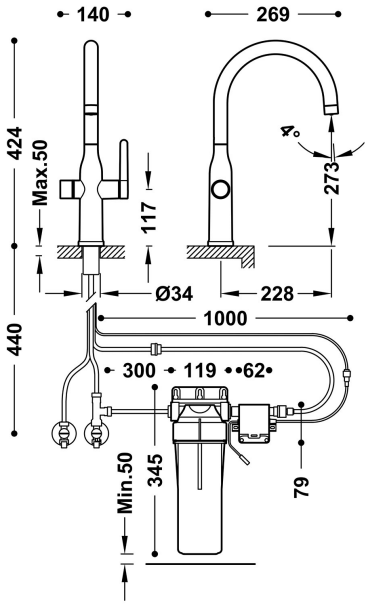

23045301OM

KITCHEN

Dual-source single-lever kitchen mixer for mains and filtered water

· With touch system for filtered water.

· Includes a filter for six months (10,000 litres) of filtered water.

· The filter removes b acteria, viruses and heavy metals.

· Flexible G3/8 connection hoses.

24K Matt Gold Finish

Aerator: HIDDEN MADE SILLICONE M18.5x1

Spout swivel angle: 360

Cartridge reference: 29902503

Flow rate (l/min): 7,6

Cold-tres®. Energy savings. The taps turn on with cold water, preventing unnecessary activation of the water heater.

Long-lasting cartridge.

Connecting element: FLEXIBLE G3/8"

Acoustic group: I -

Material: Low lead content brass

N New

Corrosion resistance