

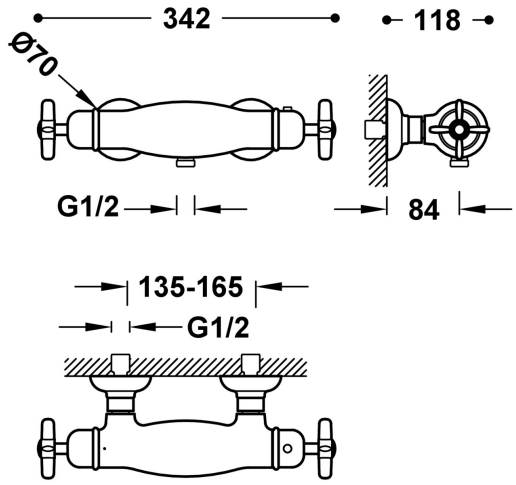

24216409LM

TRES-CLASIC

Wall-mounted thermostatic shower mixer

· Anti-limescale brass hand shower: Ø 78 mm.

· Adjustable support for hand shower.

· Reinforced metal hose.

Matt Aged Brass Finish

BELGAQUA certification (Belgium)

Environmental Quality Guarantee (Catalonia)

Brass hand shower

Tres Instant: The thermostatic cartridge ensures a constant flow of water at the desired temperature, in spite of pressure or temperature changes.