

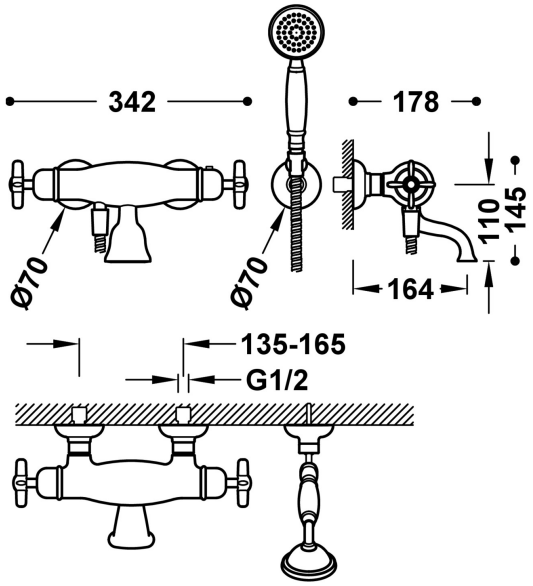

24217409LV

TRES-CLASIC

Wall-mounted thermostatic mixer tap for bath and shower

· With cascade outlet.

· Inverter integrated into the flow regulator.

· Anti-limescale brass hand shower: Ø 78 mm.

· Adjustable support for hand shower.

· Reinforced metal hose.

Aged Brass Finish

BELGAQUA certification (Belgium)

Brass hand shower

Tres Instant: The thermostatic cartridge ensures a constant flow of water at the desired temperature, in spite of pressure or temperature changes.