

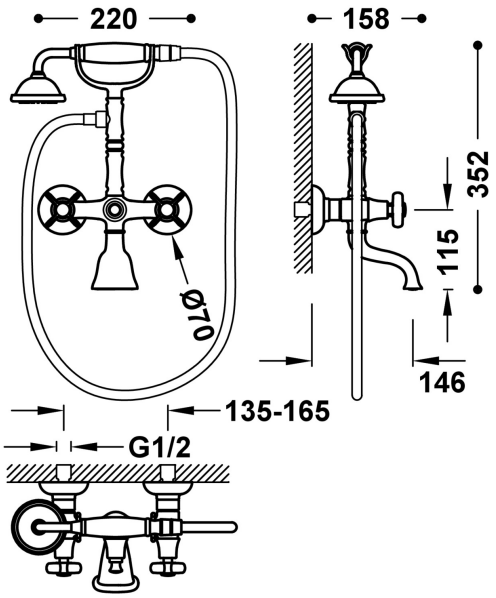


# 24217601LM

**TRES-CLASIC**

## Wall-mounted two-lever mixer for bath and shower

- Anti-limescale brass hand shower: Ø 78 mm.
- Fixed support for hand shower.
- Reinforced metal hose.

Matt Aged Brass Finish

Angle of rotation of mounts: 90

Flow rate (l/min): 16

BELGAQUA certification (Belgium)

Distributor cartridge: 29919199

Brass hand shower

Connecting element: MURAL G1/2"

Eccentricity (cm): 13-16

Material: Low lead content brass

Mount: 9134282

Cold mount: 9134282

Corrosion resistance