

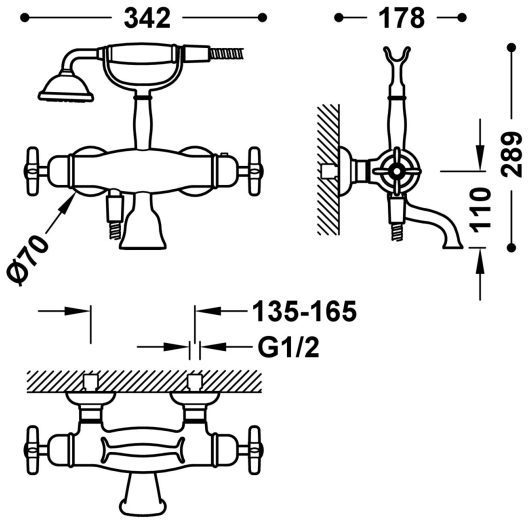

24217609LM

TRES-CLASIC

Wall-mounted thermostatic mixer for bath and shower

· With cascade outlet.

· Inverter integrated into the flow regulator.

· Anti-limescale brass hand shower: Ø 78 mm.

· Fixed support for hand shower.

· Reinforced metal hose.

Matt Aged Brass Finish

BELGAQUA certification (Belgium)

Brass hand shower

Tres Instant: The thermostatic cartridge ensures a constant flow of water at the desired temperature, in spite of pressure or temperature changes.