

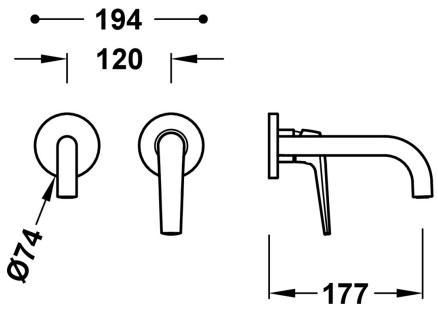

28130021NM

FUJI

Visible part for recessed sink body

· Concealed body not included (ref.

· 20830002).

· Visible part only.

· Includes concealing plate, lever and 177 mm spout.

Matt Black Finish

Aerator: HIDDEN MADE SILLICONE M18.5x1

Cartridge reference: 29902801

Flow rate (l/min): 5,7

DVGW Visible Certification

Environmental Quality Guarantee (Catalonia)

NF Visible Component Cert. (Fr)

Acoustic group: I -

Material: Low lead content brass

New

Corrosion resistance